NOTES:

1. Exterior material - Hastelloy C276
2. Surface roughness Ra <1.6 µm
3. Weld line may protrude or be visible near mid-line of XBOT

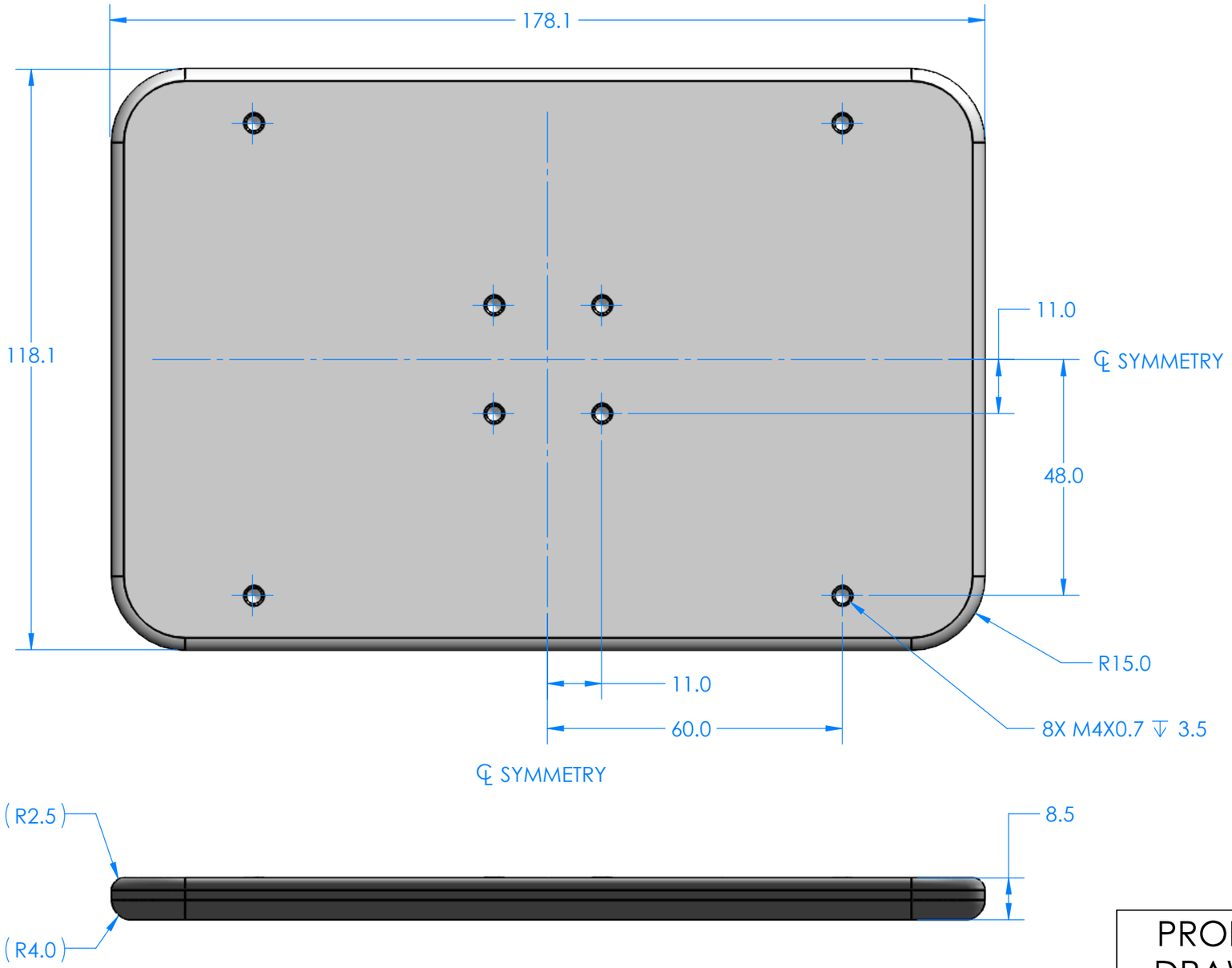

PRODUCT DRAWING	Dimensions and tolerances per ASME Y14.5M-1994 Surface texture per ANSI/ASME B46 1-1985 Product dimensions subject to change		
Model	Dwg. No.	Rev.	
XBOT M3-08-CR01-10, Chemically Resistant	**M3-08-CR01-10-OEM**	**0.0**	
Planar Motor Incorporated - Vancouver, Canada			

Issue Date	Projection	Dimension	Size	Scale	Sheet
2026/02/25		mm	A3	1:1	1/1

Planar Motor

PROPRIETARY AND COPYRIGHT, PLANAR MOTOR INCORPORATED
THE INFORMATION CONTAINED IN THIS DRAWING IS THE SOLE PROPERTY OF PLANAR MOTOR INCORPORATED AND ANY REPRODUCTION IN PART OR AS A WHOLE WITHOUT THE WRITTEN PERMISSION OF PLANAR MOTOR INCORPORATED IS PROHIBITED.