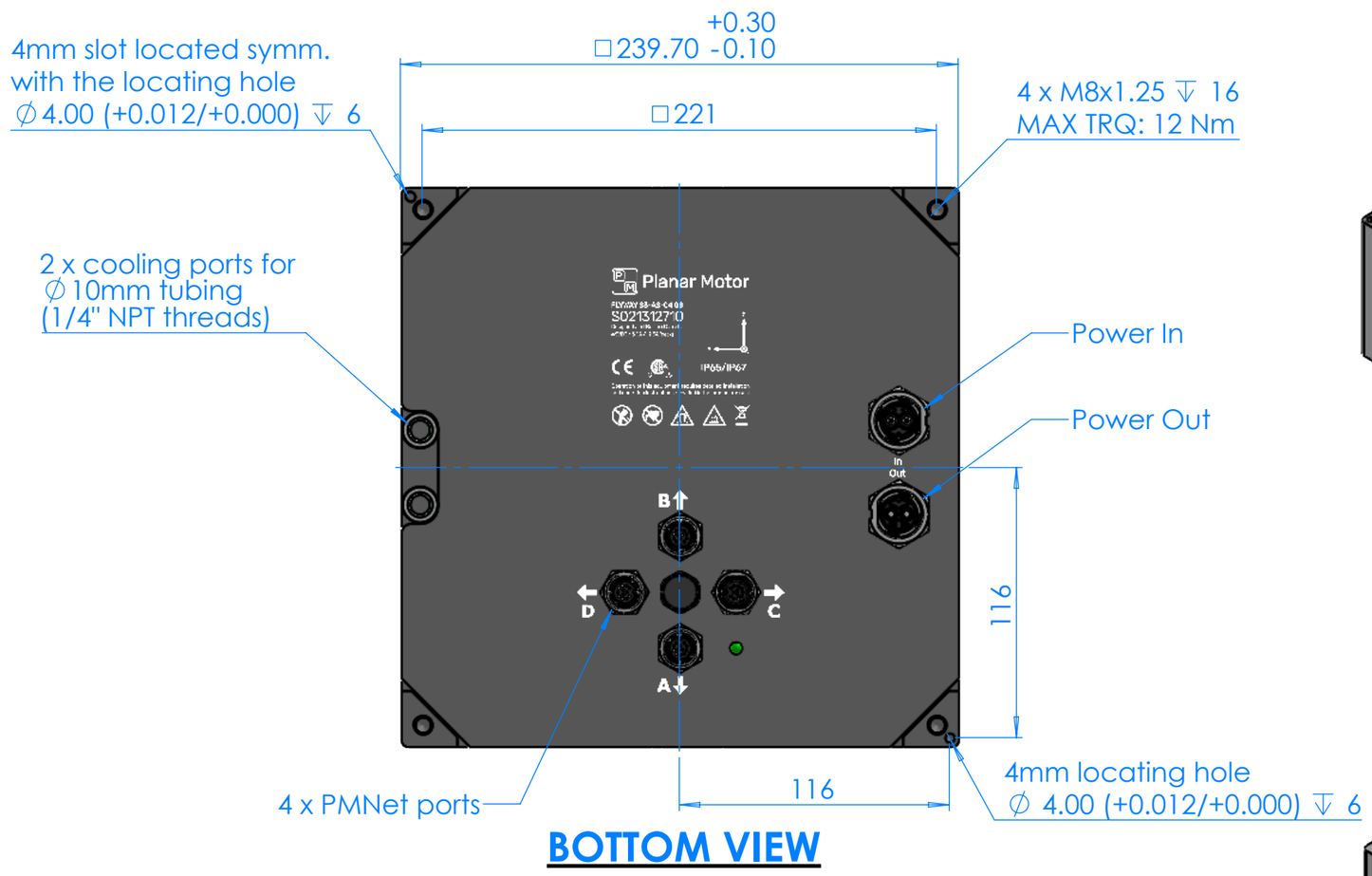

BOTTOM VIEW

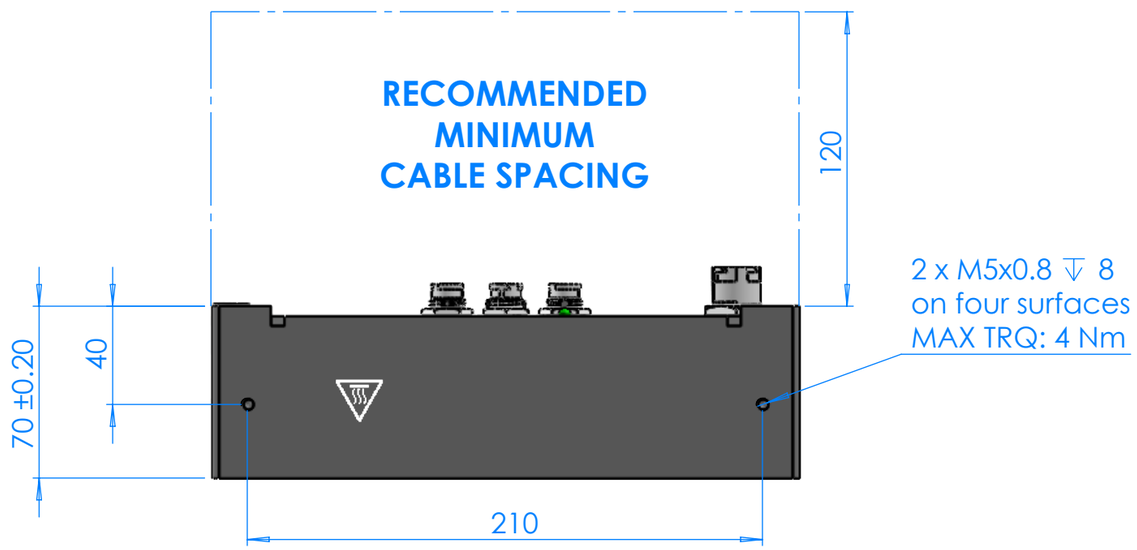

SIDE VIEW

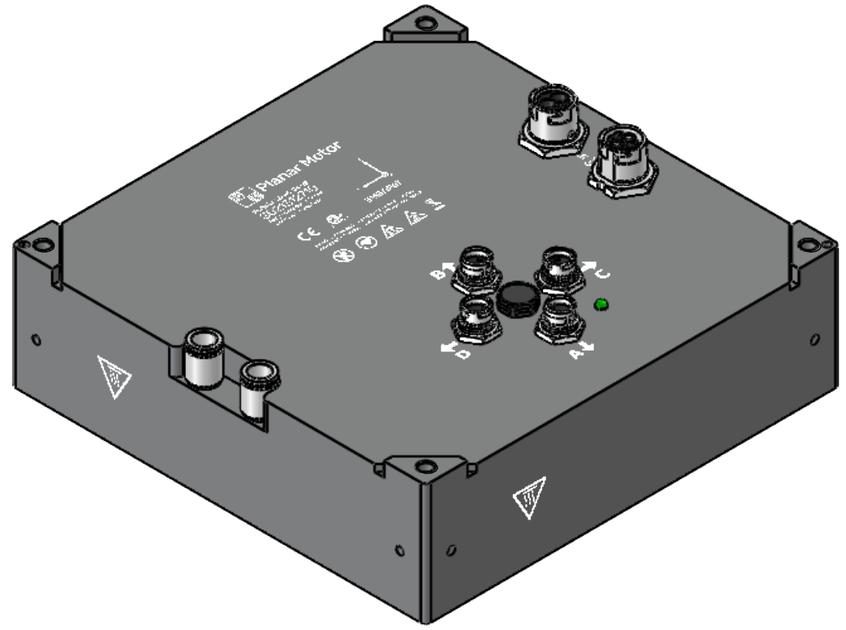

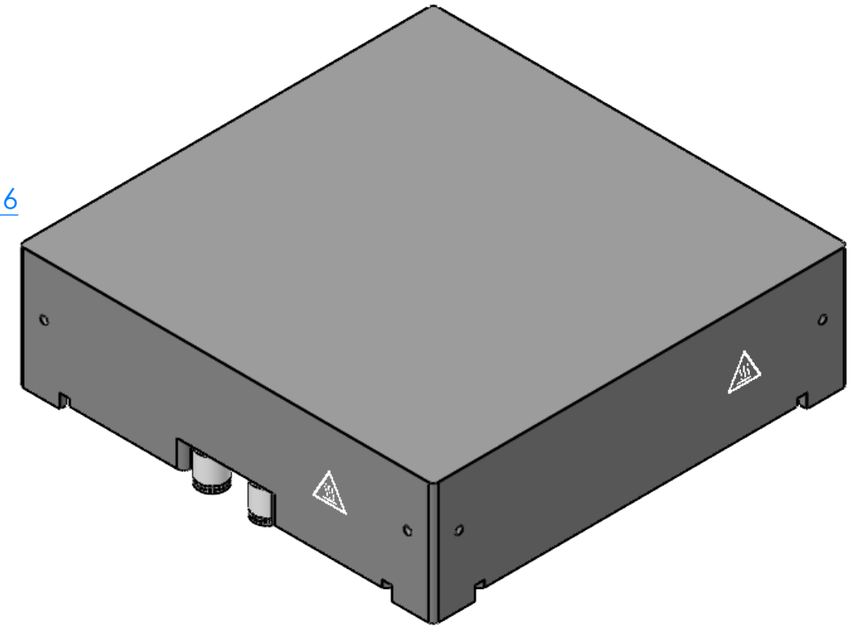

PRODUCT DRAWING	Dimensions and tolerances per ASME Y14.5M-1994 Surface texture per ANSI/ASME B46 1-1985 Product dimensions subject to change				
Model	Dwg. No.		Rev.		
FLYWAY S3-AS	**S3-AS-04.08-OEM**		**3.1**		
Planar Motor Incorporated - Vancouver, Canada					
Issue Date	Projection	Dimension	Size	Scale	Sheet
2026/02/19		mm	A3	1:2.5	1/1

PROPRIETARY AND COPYRIGHT. PLANAR MOTOR INCORPORATED
THE INFORMATION CONTAINED IN THIS DRAWING IS THE SOLE PROPERTY OF PLANAR MOTOR INCORPORATED AND ANY REPRODUCTION IN PART OR AS A WHOLE WITHOUT THE WRITTEN PERMISSION OF PLANAR MOTOR INCORPORATED IS PROHIBITED.