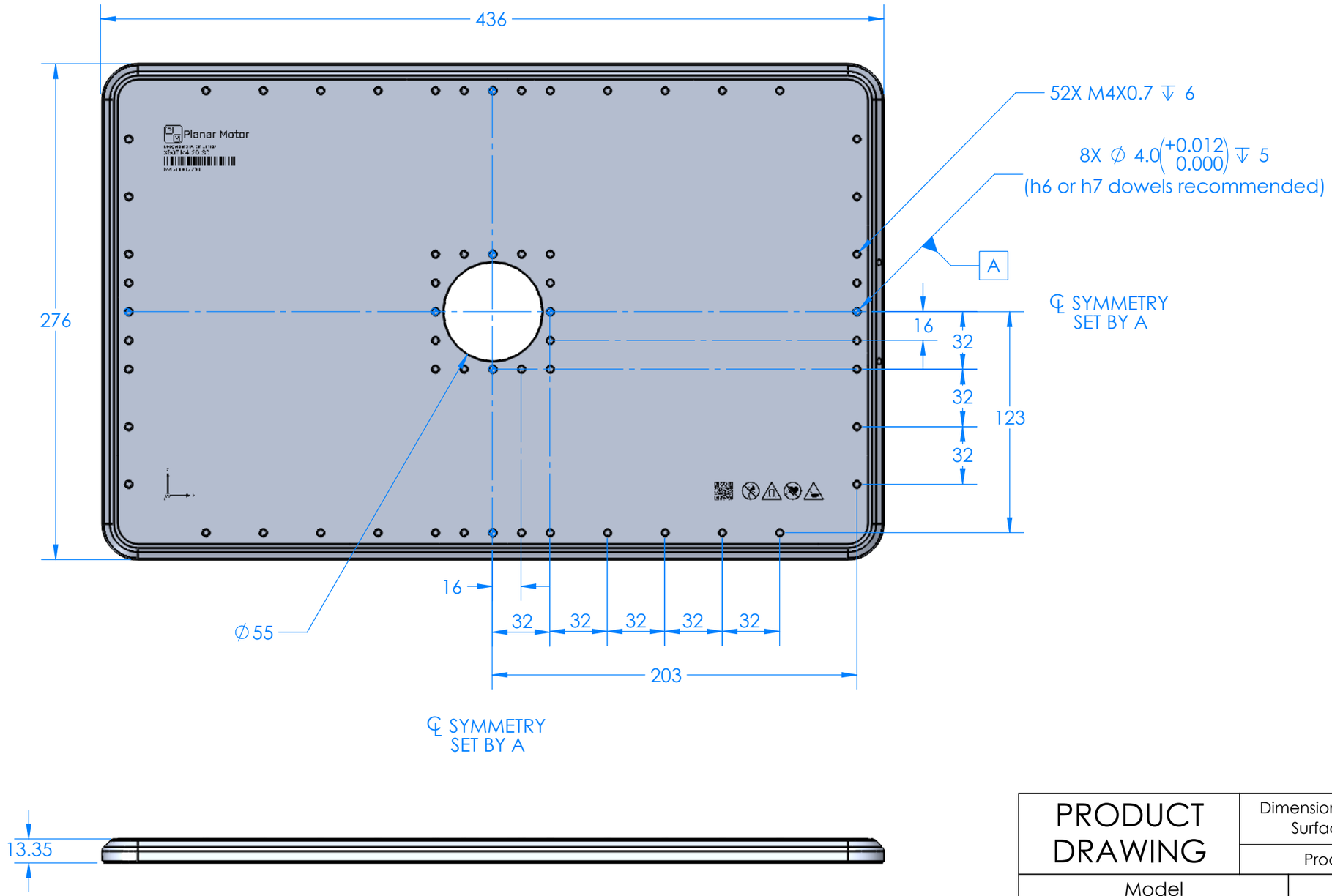

PRODUCT DRAWING	Dimensions and tolerances per ASME Y14.5M-1994 Surface texture per ANSI/ASME B46 1-1985 Product dimensions subject to change		
Model	Dwg. No.	Rev.	
XBOT M4-20-SD00-11	**M4-20-SD00-11-OEM**	**0.0**	
Planar Motor Incorporated - Vancouver, Canada			

Issue Date	Projection	Dimension	Size	Scale	Sheet
2024/12/19		mm	A3	2:5	1/1

PROPRIETARY AND COPYRIGHT. PLANAR MOTOR INCORPORATED
THE INFORMATION CONTAINED IN THIS DRAWING IS THE SOLE PROPERTY OF PLANAR MOTOR INCORPORATED AND ANY REPRODUCTION IN PART OR AS A WHOLE WITHOUT THE WRITTEN PERMISSION OF PLANAR MOTOR INCORPORATED IS PROHIBITED.